MPR-Angle connector 45° type S+

galvanised

Application

- Connecting element for on-the-wall installations, shelves and rail constructions, preferably by using the MPR-Support channel 41/41

Your advantages

- Fast and simple installation of angled joints in combination with the MPR-Connection lock type S+

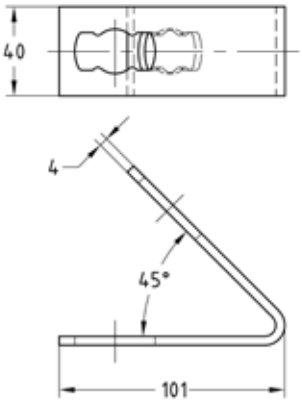

Features

Design	For profiles	**Part no.**	Sales unit	Pack unit
1+1	41/21-41/124	**165830**	25	Pieces

09/2024